Research on Remote Monitoring System of Electron Beam Welding Machine Based on Internet of Things

Xiaohu Liu

Sunshine Boulevard No.2666 college of Xinyu,jianxi,China

Xylxh163@163.com

Keywords: Embedded; Remote monitoring; Internet of things; Electronic beam welding machine

Abstract. Electron beam welding machine is widely used in the field of industrial welding. Due to the occurrence of human fault safety accidents, it has a great impact on industrial production. In view of the current security problems, this paper develops a remote monitoring system independent of electron beam welding machine based on Internet of things, embedded software and hardware and website development technology to achieve the purpose of early warning. Firstly, the embedded Linux system is transplanted on the basis of S3C2440 microprocessor. Boa server and Sqlite3 database were transplanted on the basis of the embedded Linux system. An embedded Web server was implemented, an Internet of things for data collection was built, and the model was implemented on the embedded Web server and the Internet of things.

Introduction

The Internet of things is a self-organizing and dynamic multi-hop network formed by a large number of sensor nodes distributed in a designated area. It is a new computing model. The Internet of things realizes the perception of the physical world through sensors and is located at the endings of the Internet of things [1]. At present, the application scale and complexity of the Internet of things are increasing. On the other hand, applications often need to run on heterogeneous platforms, all of which have caused the difficulty of development. Therefore, middleware technology is needed to mask these differences and complex technical details to simplify the application. Embedded sensor middleware is a network device integrating network communication, sensor technology, embedded technology and distributed information technology. It connects sensor network and external Internet and plays an important role in sensor network. Electron beam Welding machine is a kind of precise welding equipment, which makes use of the principle of high-speed electron beam bombarding. This project designs and implements an electronic beam welding machine remote monitoring system based on the embedded Internet of things. Through the Internet of things the state parameters of the equipment are detected, and the data are transmitted to the management center for unified management, so as to master the working state of the equipment at any time and ensure the safety of users.

Structure of Embedded Internet of Things

The sensing, transmission and monitoring system of the electronic beam Welding machine should include sensing layer, network layer and application layer. The sensing layer is the foundation of the monitoring system, which collects operation status information by reasonably arranging various sensors in key parts of the equipment [2,3]. The network layer is the key layer for data transmission of the monitoring system, responsible for transmitting signals collected by sensors to the server. Its core equipment is the Internet of things. The application layer is the core layer of the monitoring system, which is the most intelligent layer. The intelligent processing algorithm of the monitoring system for data is integrated in the application layer, which is also responsible for presenting the running state data of the electron beam welding machine to the end users of the system. In addition to the basic sensing layer, network layer and application layer, the electronic beam welding equipment security remote monitoring system should also have the characteristics of reliability, real-time, universality and expansibility.

  DOI: 10.25236/ciais.2019.009

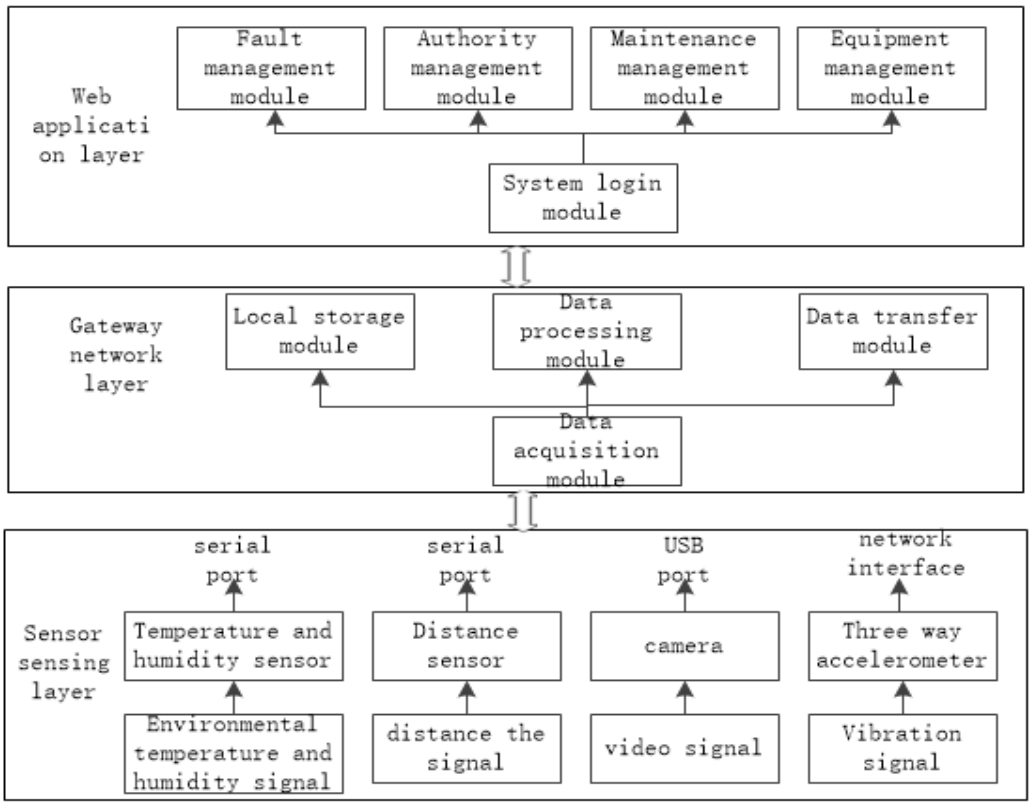

Figure 1. An overview of the embedded Internet of things

Embedded Remote Monitoring System

Electron beam welding machine is a kind of large welding machinery of the more frequently used, working environment is relatively poor, in order to meet the market demand to monitor various related parameters of electron beam welding machine, according to the rules of electron beam welding inspection regularly, detection of variables can be divided into two categories: the environment parameters of electron beam welding machine monitoring. Monitoring the running parameters of electron beam welding machine. The environmental variables monitored in this paper include temperature and humidity, dust and smoke, and the running parameters of the electron beam welding machine include running state, running time and running times. Temperature and humidity sensor, this paper using AM2302 as the temperature and humidity sensor, the sensor integrated temperature and humidity measurement as one of the digital sensor, including a capacitive humidity measurement element and an NTC temperature measurement element, with strong anti-interference ability, fast response speed, cost-effective advantages. Adopts the GP2Y1050 photoelectric dust sensor produced by sharp company to detect the dust concentration in industrial field. This sensor adopts the principle of light reflection to detect the concentration of dust particles. Its output mode is 0-3.3v voltage signal. Smoke sensor adopts MQ-2 as the smoke sensor to detect whether there is smoke in the electrical equipment, so as to find fire hazards in time. The sensors as part of the tin oxide semiconductor gas sensitive material, when the smoke to the sensor of the space, will cause the changes of surface conductivity of semiconductor materials, the concentration of the smoke, the greater the conductivity, the greater the output resistance is lower, the output of the analog signal, so take advantage of this size can monitor the smoke concentration. The sensor is suitable for the detection of combustible gas and smoke, and has the advantages of wide measuring range, fast response, long life and simple driving circuit.

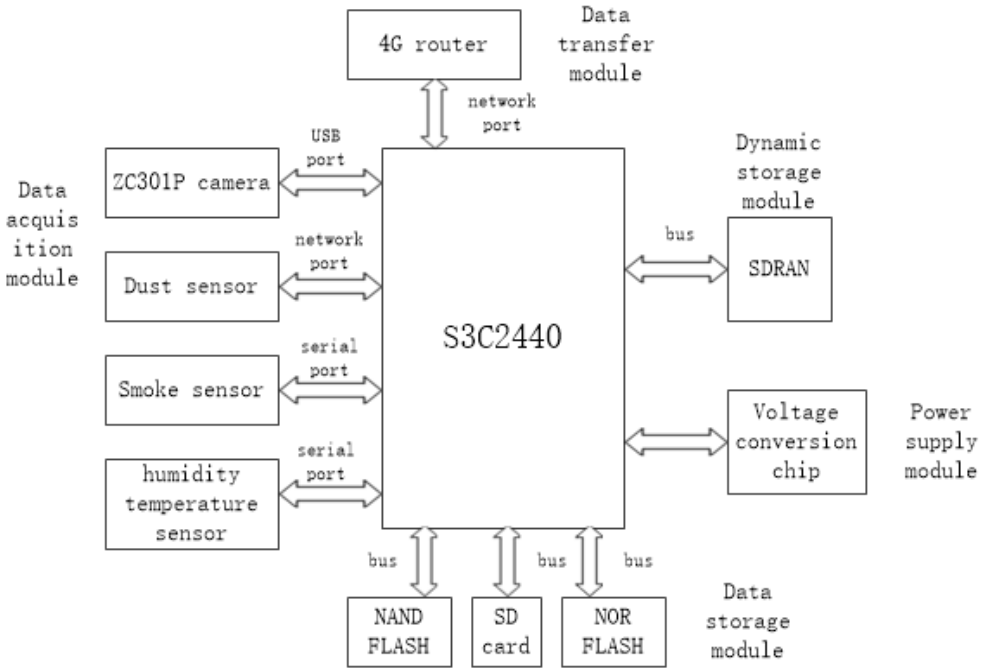

Figure 2. Embedded core and peripheral connections

There are many sensors with different types in this monitoring system, and their signal output modes are also different. A standardized sensor network needs to be built in order to facilitate the system to collect sensor data manage each sensor node and standardize the sensor data format. The obvious advantage of the Internet of things is that it is easy to install without wiring. However, its disadvantages are transmission distance limited obvious. The response speed of the system to the sensor is high while the way of the Internet of things is difficult to meet the system requirements. The monitoring system of electron beam welding machine developed in this paper aims to increase the security of the system. If wireless transmission mode is adopted, the response speed of monitoring unit to emergencies will be reduced. Therefore, wired transmission is selected as the scheme of constructing sensor network in this paper. But each sensor output methods are not unified, and there is no uniform data output format is not conducive to diagnosis and management of the sensor [4,5]. The solution of this paper is combined sensor and embedded microcontroller processor to build smart sensors, then each sensor node is connected to the data bus in order to achieve the purpose of the unified management. A task is a thread in a real-time operating system [6,7]. At any time, there are mainly 5 states of the task, namely sleep state, ready state, running state, waiting state and interrupted state. It has the right to use the whole CPU executing the current task, while other tasks are in ready and waiting state. The transition between these states is shown in Figure 3. According to the above requirements, there are mainly five tasks to be completed in this paper.

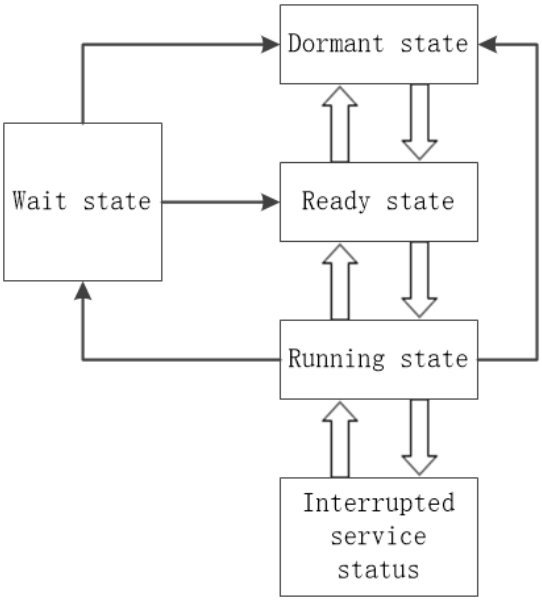

Figure 3. The task status flow

The serial port sending task is realized the summary of bus data, data obtained after I/O scanning and the running times, and then package the data and send it to the terminal node through the serial port. Serial data reception processing tasks like bus for data processing task when a serial port receives the data to occur. Complete data is accepted by the interrupt handler by sending a semaphore to serial data processing tasks when waiting for the signal function after receiving the semaphore. According to the device ID to judge whether this data is sent to the device serial port receive data processing tasks start to deal with the data analysis. Perform the corresponding operation according to the instruction code.

Build the Embedded Internet of Things Monitoring System

The embedded Internet of things remote monitoring system is the brain of the whole system, where all the data are stored. It consists of three parts, namely database, gateway service program and Web application program. The database is an important part of the server, the storage center of the whole system, mainly used to store the data sent from the intelligent gateway, as well as the user data of the Web application. When setting up a server, the first priority is to consider setting up a reasonable database. Common databases include SQL Server of Microsoft, Oracle of Oracle, DB2 of IBM, etc[8]. In order to ensure compatibility and ease of use, this system selects SQL Server from Microsoft as the database development tool. Because the server also contains the Web application, so when creating the database, using the built-in framework of ASP.NET to initialize the database in advance, add necessary tables and views, shorten the development cycle, improve the development efficiency and the security of the application.

The monitoring system of electron beam Welding machine developed in this paper can be used for different kinds of monitoring of electron beam Welding machine, so the categories of monitoring parameters vary with different monitoring objects. In order to facilitate the management of monitoring data of different equipment, a separate data table is established for each monitoring parameter in the database. This table mainly contains data ID, data value, data storage time and device ID, of which data ID is the primary key and device ID is the external key to associate the monitoring data table with the device information table. In addition, the warning information and fault information table is similar to the sensor table by simply changing the data type of the fields storing the fault information and warning information to nvchar. Through the above several parts of the database design, we can establish an independent and interrelated data table group, which provides a data storage architecture for the development of the whole application layer. □□

A gateway server is an application that runs on a cloud server and serves an embedded gateway.

Its main functions are: provide gateway connection and receive gateway data into the database. Receive user instructions and push them to the gateway. Device query and cull. Gateway service program of this paper is based on the MFC application, gateway server and gateway communication for the traditional C/S architecture, this mode of the server is divided into concurrent server and iterative [9] the former refers to the server at the same time to provide service to multiple clients, the latter is the server every time can only provides service to a client. The gateway server in this paper adopts a concurrent server to serve multiple gateways at the same time. According to the overall scheme design, this paper chooses Web pages as the way for the system to interact with users, that is, B/S architecture. So the user's instructions come from the client's browser, and the browser's data interaction with the server is typically Web application and database interaction. There are two ways to enable the gateway service program to read user instructions: the Web application communicates directly with the gateway server. Communicate with the database as an intermediate bridge. According to system requirements, the Web application should include the following functions: user registration and login, real-time data view, historical data view, historical data analysis, user and device management, remote control, and message board.

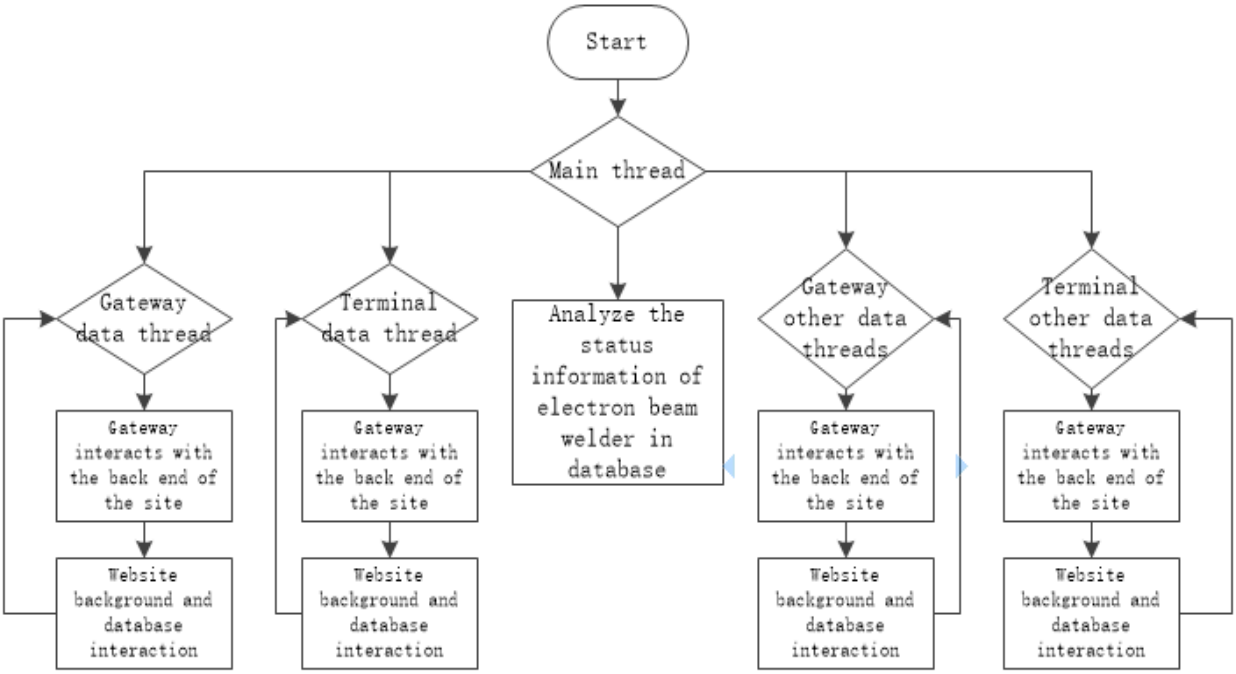

Figure 4. The website data interaction process

Summary

This paper adopts the three-layer architecture of Internet of things and embedded technology to develop the perception layer and network layer and application layer. Constructs the remote monitoring system of electron beam welding machine, which realizes the monitoring and recording of the running state and running environment of the electron beam welding machine. In order to facilitate remote users to operate the electron beam welder, a monitoring unit is built with S3C2440 as the core to test the sensor for monitoring parameters and develop corresponding programs for different sensor nodes. The I/O model of gateway service program in this paper adopts completion port to provide remote monitoring service for electron beam welder. Since it is impossible to use a large number of embedded gateways to connect to the server for testing according to the actual usage, this paper adopts the server stress testing tool provided by piggyxp to test the gateway service program [10]. The gateway service program occupies a large amount of CPU when constantly refreshing messages from the client, and the CPU utilization rate of the gateway service program running in the background is low, which proves that the port can satisfy the concurrent

processing of a large number of client's data requests without causing the server to crash, and realizes the monitoring of the running state and running environment of the electron beam welding machine.

Acknowledgements

Provincial department of education science and technology project of Jiangxi 2017
Project No.GJJ171076

References

[1] G.Y.Wu,Y.Wu. Internet of things technology and application(China machine press,2013) (In Chinese)
[2] Y.Liu, H.Rong. A brief introduction to the perceptual layer of the Internet of things: Computer school;(2010)No.3,p55. (In Chinese)
[3] B.Li, M.Guan. Research and implementation of an arm-based embedded Web server: Computer technology and development;(2013). (In Chinese)
[4] D.S.Wei. Complete manual of embedded Linux application development(People posts and telecommunications press,2008). (In Chinese)
[5] H.Y.Chen, S.G.Ren. Research on embedded Linux root file system:Modern electronic technology;Vol.33(2010)No.4,p73-75. (In Chinese)
[6] L.Jian, F.D. Sheng, W. Yue. Et al. Study of Remote Elevator Monitoring Fault Detection System:Advanced Material,2012.
[7] T. Liu, X. Liao, J. Zeng. Design of intelligent elevator remote monitoring system based on ethernet[C] International Conference on Computer Science & Education, 2010.
[8] X.Z.Zhang, Q.S.Wu. SQL Server2008 database application course(People's posts and telecommunications press,2013). (In Chinese)
[9] J.Z.Luo.TCP/IP protocol and network programming technology(Tsinghua university press,2004). (In Chinese)
[10] http://blog.csdn.net/piggyxp/article/details.